Analog Inputs

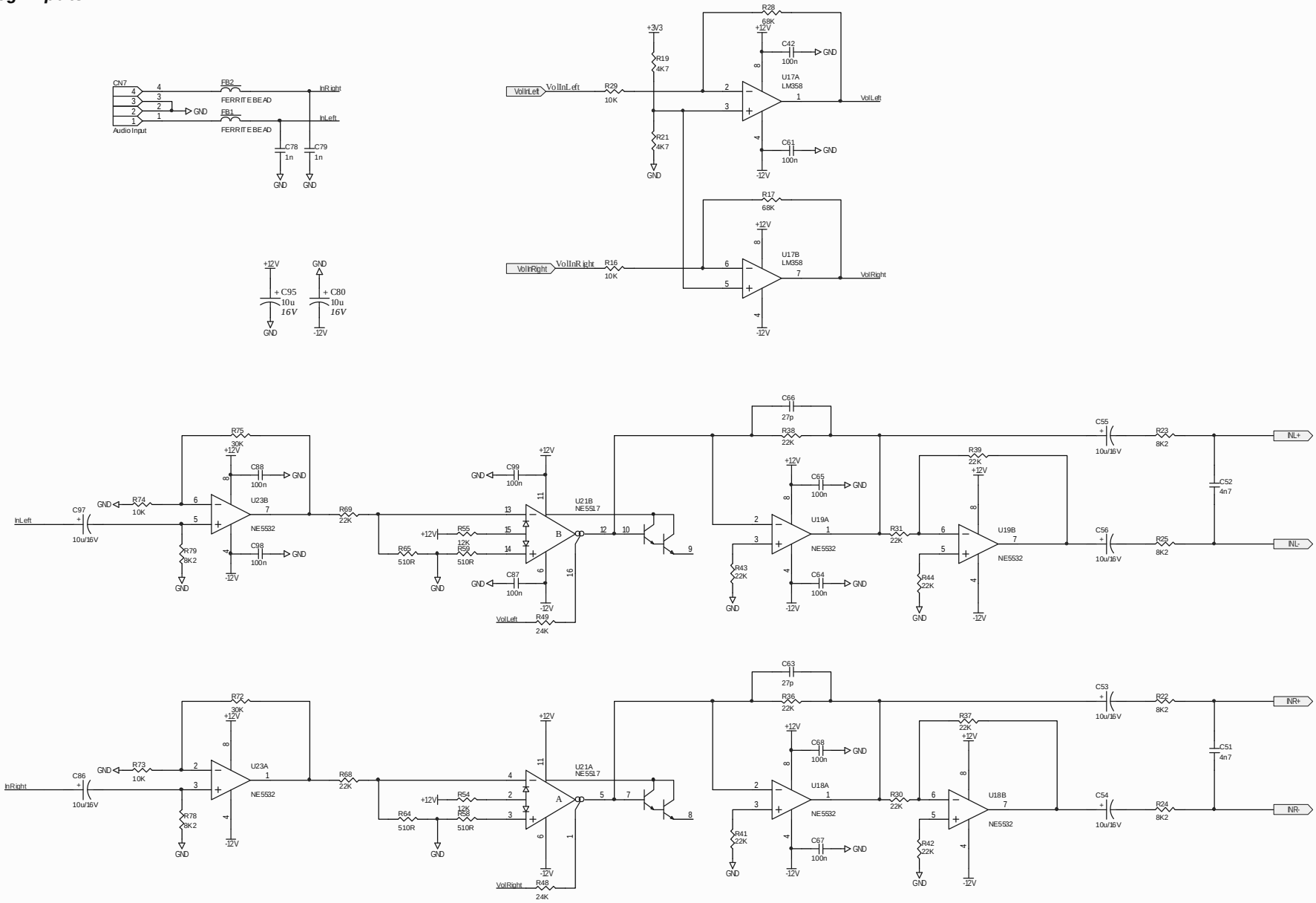

Title:	Miss Parker		
Size: A3	Version: 1.1	Revision: A	
Date: 22/03/2005	Time: 21:47:22	Sheet 1 of 1	
File: Analog Input.Sch			

PDF created with FinePrint pdfFactory trial version www.pdffactory.com

Analog Outputs

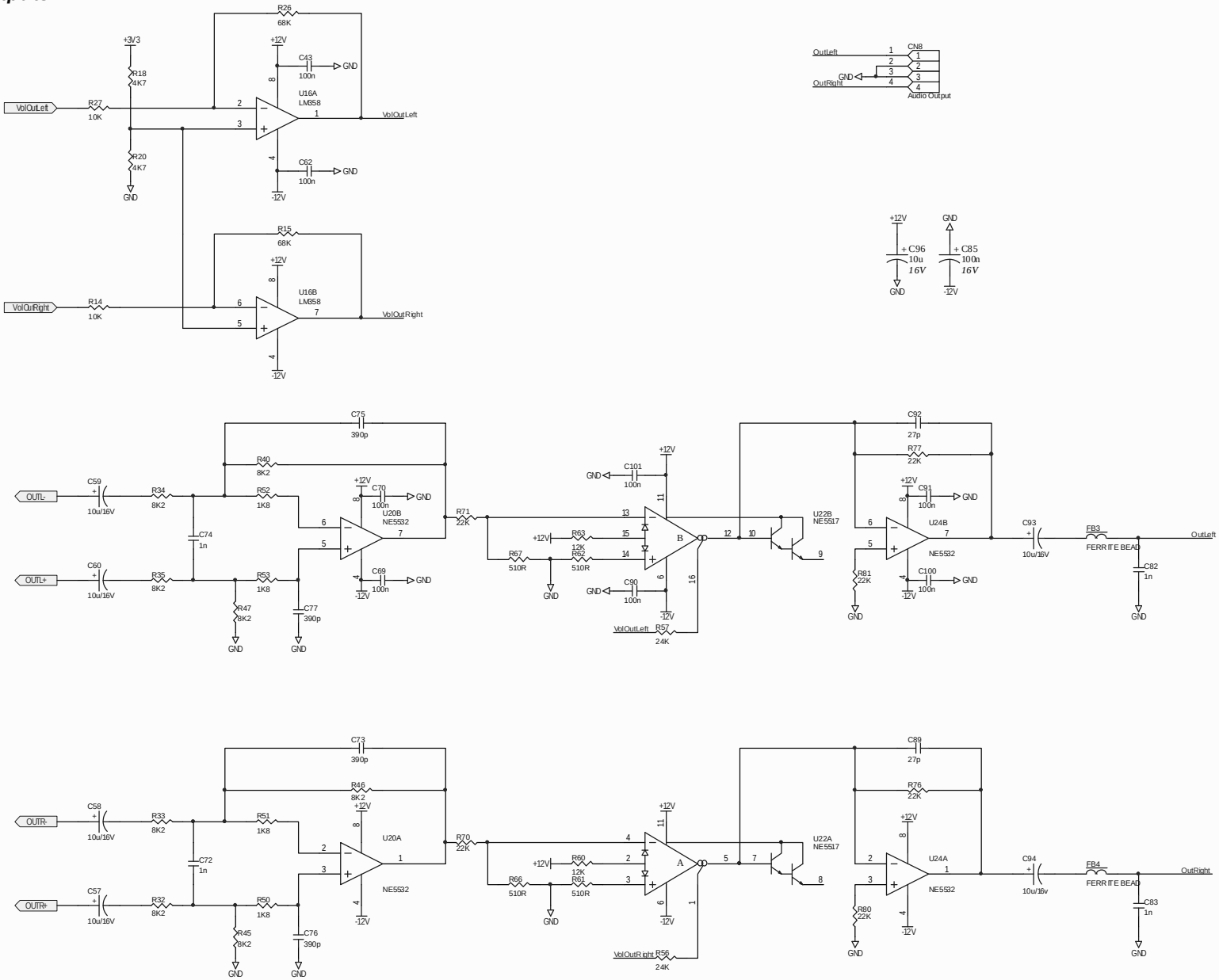

Title:	Miss Parker		
Size: A3	Version: 1.1	Revision: A	
Date: 22/03/2005	Time: 21:47:22	Sheet 1 of 1	
File: Analog Output.Sch			

PDF created with FinePrint pdfFactory trial version www.pdffactory.com

USB Microcontroller

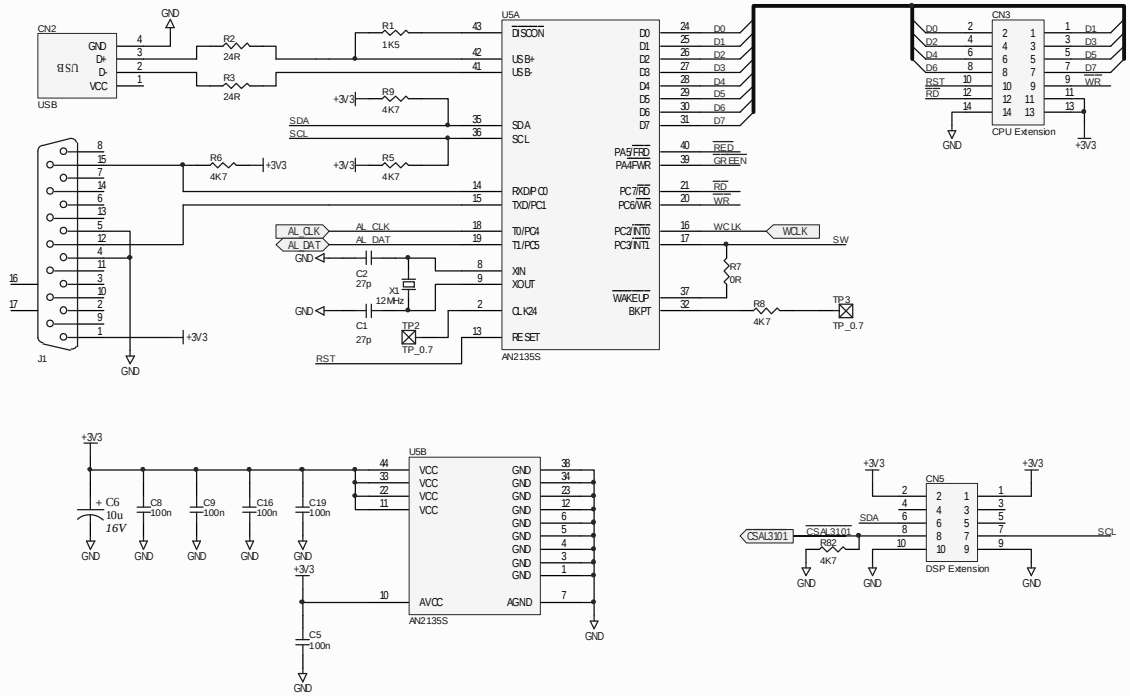

I²C Peripherals

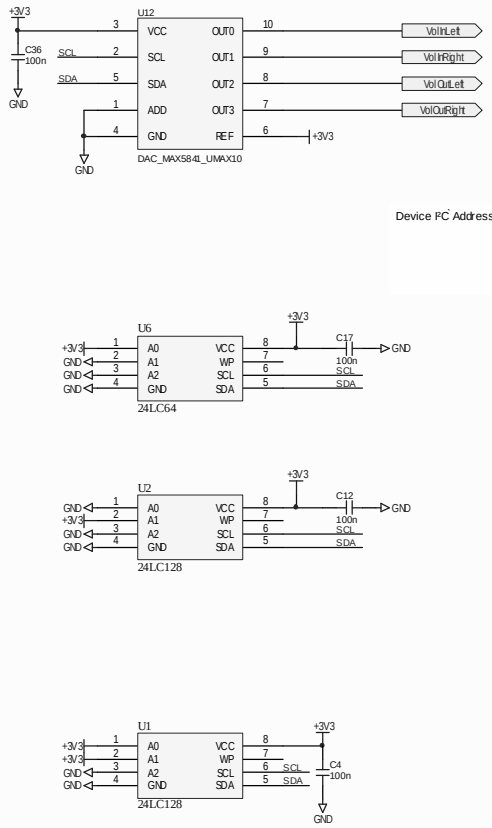

LED Indicators

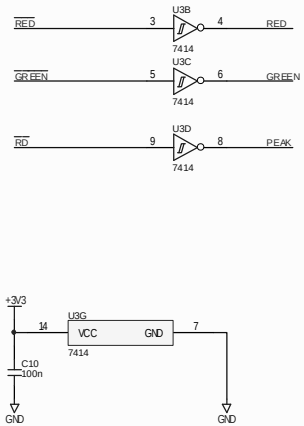

Main Reset

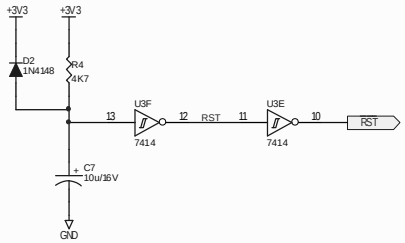

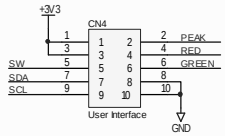

Title: Miss Parker			
Size: A3	Version: 1.1	Revision: A	
Date: 22/03/2005	Time: 21:47:22	Sheet 1 of 1	
File: CPU.Sch			

PDF created with FinePrint pdfFactory trial version www.pdffactory.com

24bit Analog - Digital Converter

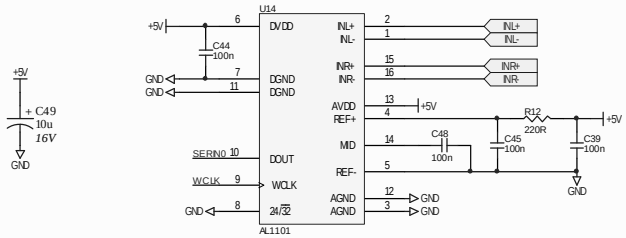

Digital Signal Processor

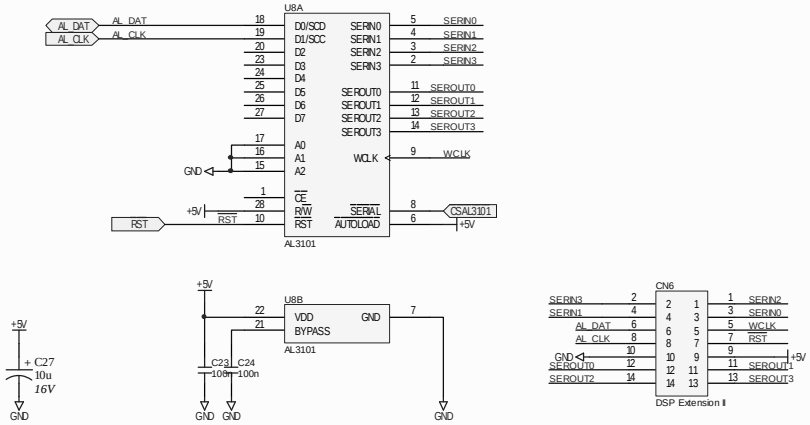

24bit Digital - Analog Converter

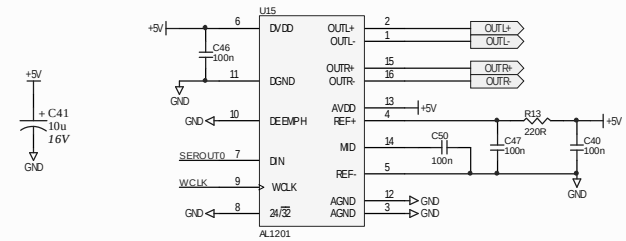

Working Clock Generation

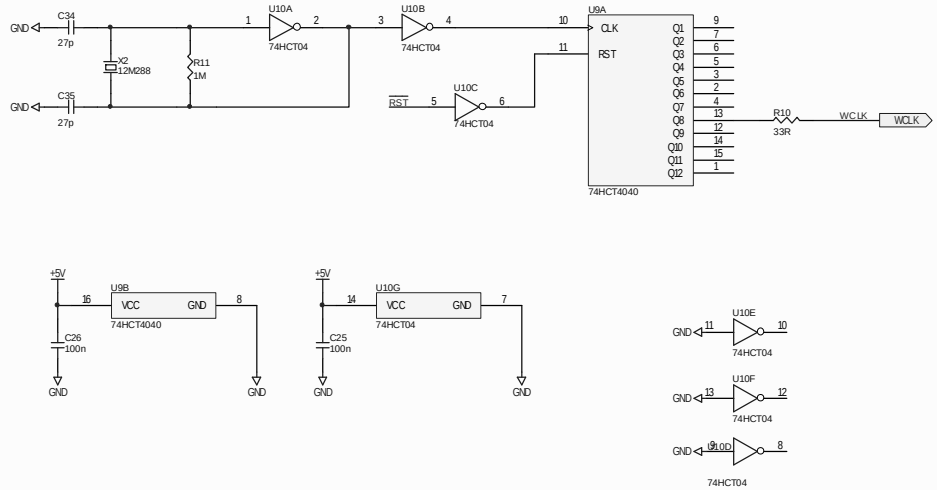

Title: Miss Parker			
Size: A3	Version: 1.1	Revision: A	
Date: 22/03/2005	Time: 21:47:22	Sheet 1 of 1	
File: DSP.Sch			

PDF created with FinePrint pdfFactory trial version www.pdffactory.com

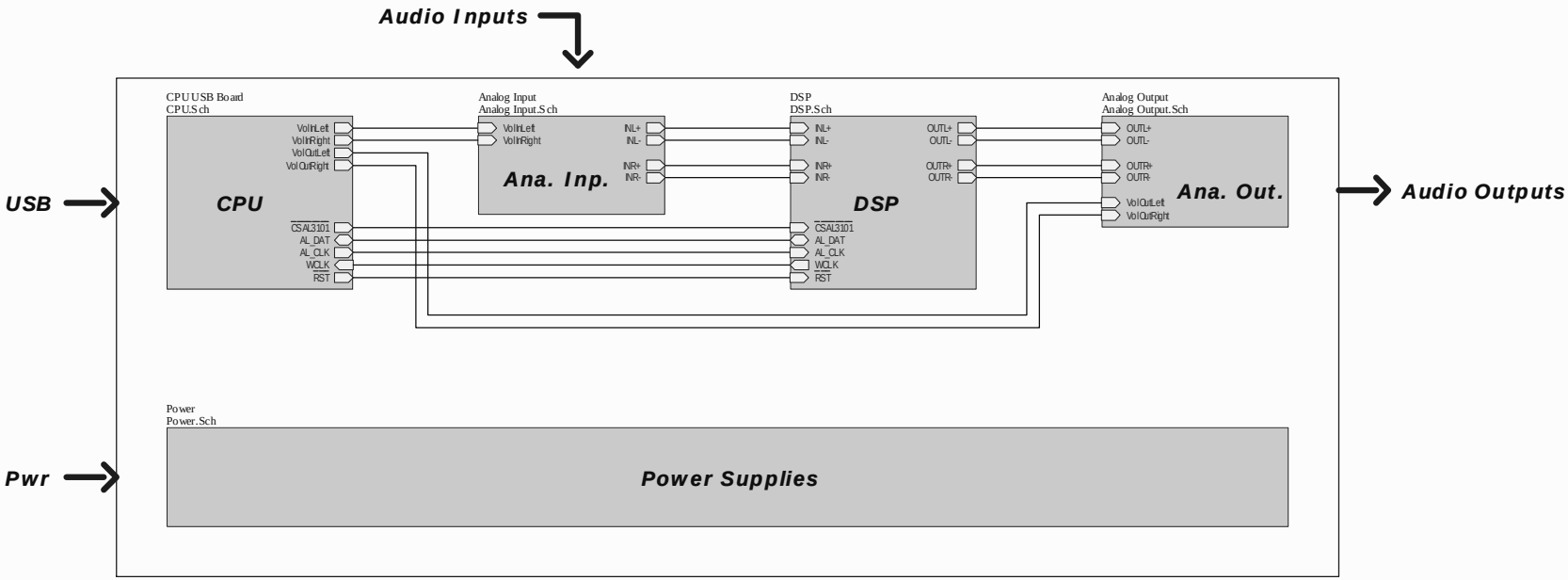

Title: Miss Parker			
Size: A3	Version: 1.1	Revision: A	
Date: 22/03/2005	Time: 21:47:23	Sheet 1 of 1	
File: MissParker.Sch			

PDF created with FinePrint pdfFactory trial version www.pdffactory.com

Power Supplies

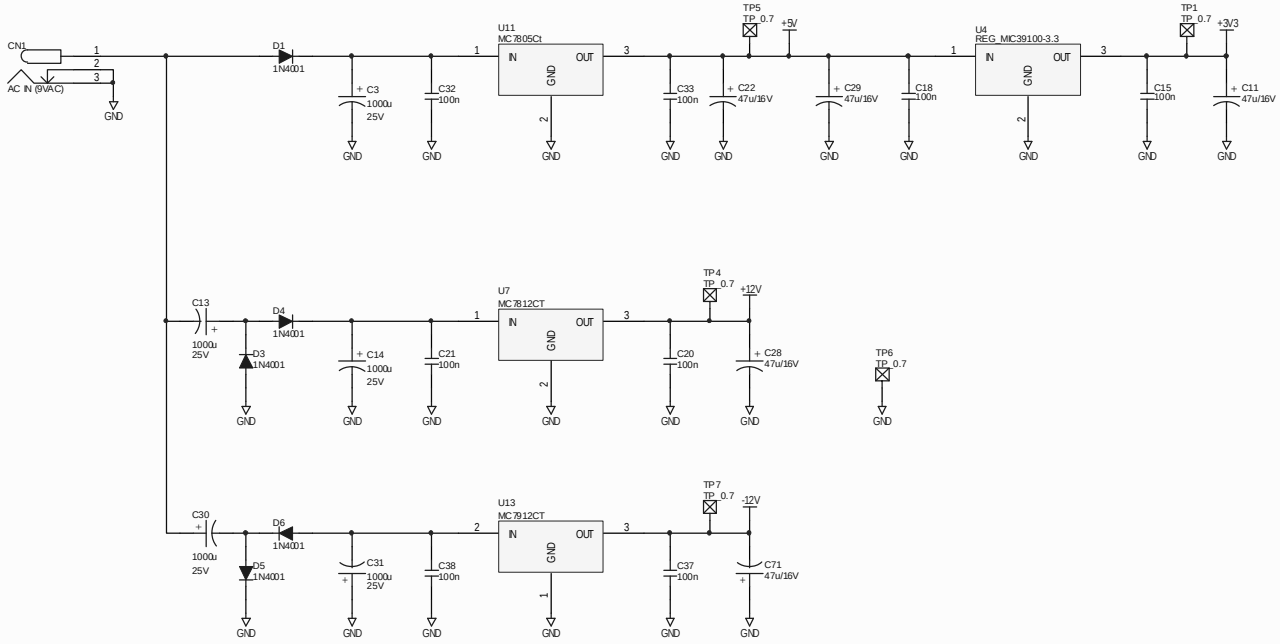

Title:	Miss Parker		
Size: A3	Version: 1.1	Revision: A	
Date: 22/03/2005	Time: 21:47:23	Sheet 1 of 1	
File: Power.Sch			

PDF created with FinePrint pdfFactory trial version www.pdffactory.com